FLY Confident and collectivities chairs

TECHNICAL SHEET

■ DESCRIPTION

1. Continuous seat and backrest shell in plywood (FSC).
   Upholstered version: flexible polyurethane foam and fabric.
   Wooden version: veneered veneer in wood design Oak (RB) or dark Oak (RBO) or white (B). Option: varnished natural wood veneer Beech (HY). Vertical grain. Varnished edges. Single shell for chair and stool.

2. Metal structure armrests (FB and C/B models).

3. Ø16mm tube metal structure painted in white, black and optionally coloured (models F, FB, TM and TA).
   Skid structure in Ø12mm rod painted in black and white, optionally coloured and chromed (models 950 FP and 950 TA).
   4-spoke structure in black or white polypropylene (models 4GT and 4GR).

■ MODELS:

952 FLY Wood

952 F (N)

952 F (B)

952 F (COLOR)

952 FB (N)

952 FB (B)

952 F (COLOR)

952 FP (N)

952 FP (B)

952 FP (COLOR)

952 FP (C)

952 4GT (N)

952 4GT (B)

952 4GT C/B (N)

952 4GT C/B (B)

952 FP BPA (C)
952 FP BPA (N)

952 FP BPA (B)
952 FP BPA (COLOR)

952 GR (N)

952 GR (B)

952 GR C/B (N)

952 GR C/B (B)

952 TB (N)

952 TB (B)

952 TB (COLOR)

952 TB (C)

952 TA (N)

952 TA (B)

952 TA (COLOR)

952 TA (C)

DIMENSIONS	Total Height	Seat Height	Total Width	Total Depth	Ancho Asiento	Seat Width	Backrest Width	Armrest Height	Writing Pad
950/952 - F	800-810 mm	450-470 mm	540 mm	535 mm	440-460 mm	410 mm	420-440 mm	-	-
950/952 - FB	800-810 mm	450-470 mm	535 mm	535 mm	440-460 mm	410 mm	420-440 mm	675 mm	-
950/952 - FP	805-815 mm	455-475 mm	515 mm	545 mm	440-460 mm	410 mm	420-440 mm	-	-
950/952 - 4GT	810-820 mm	460-480 mm	525 mm	535 mm	440-460 mm	410 mm	420-440 mm	675 mm	-
950/952 - TA	1100-1110 mm	750-770 mm	545 mm	545 mm	440-460 mm	410 mm	420-440 mm	-	-
950/952 - TM	1000-1010 mm	650-670 mm	530 mm	535 mm	440-460 mm	410 mm	420-440 mm	-	-
950/952 - FP BPA	805-815 mm	455-475 mm	515 mm	545 mm	440-460 mm	410 mm	420-440 mm	650 mm (pala)	300x240 mm

*In two sizes dimensions , the first one is for the wooden version (952) and the second one is for the upholstered

■ MODELS:

950 FLY Upholstered

950 F (N)

950 F (B)

950 F (COLOR)

950 FB (N)

950 FB (B)

950 FB (COLOR)

950 FP (C)

950 FP (N)

950 FP (B)

950 FP (COLOR)

950 4GT (N)

950 4GT (B)

950 4GT C/B (N)

950 4GT C/B (B)

950 FB BPA (N)

950 FB BPA (B)

950 FB BPA (COLOR)

950 4GR (N)

950 4GR C/B (N)

950 TM (N)

950 TM (B)

950 TM (COLOR)

950 TM (N)

950 TM (B)

950 TM (COLOR)

■ DIMENSIONS:

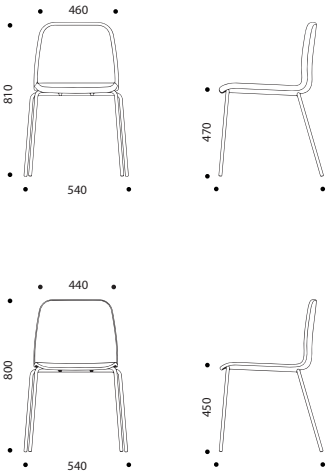

950-F / 952 F

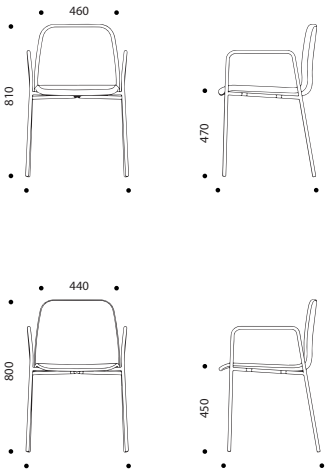

950-FB / 952-FB

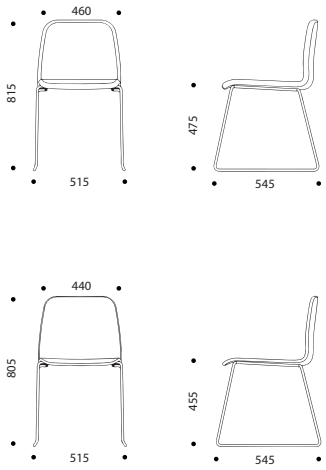

950-FP / 952-FP

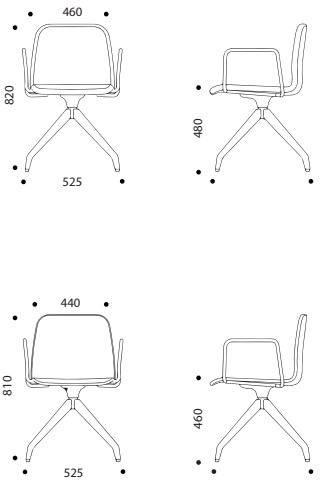

950 - 4GT C/B / 952 - 4GT C/B

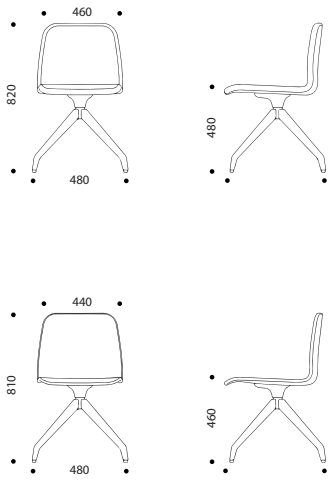

950 - 4GT / 952 - 4GT

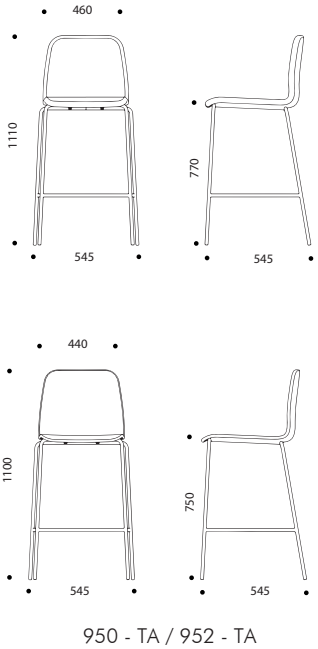

950 - TA / 952 - TA

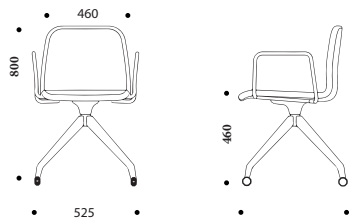

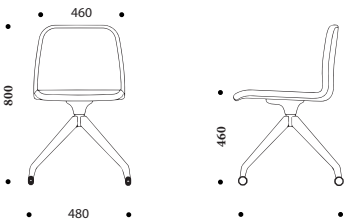

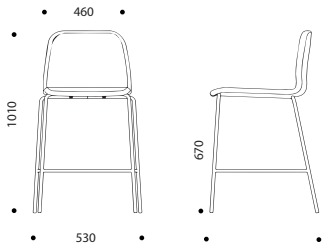

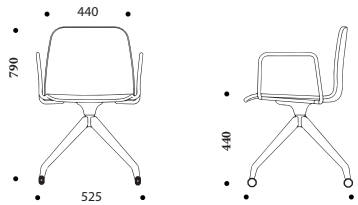

950 - 4GR C/B / 952 - 4GR C/B

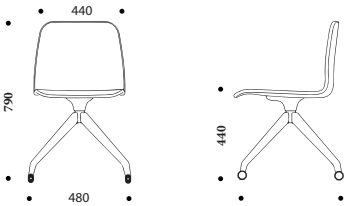

950 - 4GR / 952 - 4GR

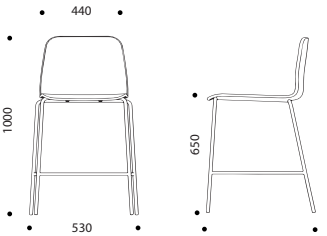

950 - TM / 952 - TM

■ TECHNICAL CHARACTERISTICS

UPHOLSTERED SEAT AND BACKREST (Models 950)

Continuous inner shell (single-shell) made of plywood and ergonomically postformed, fully upholstered with continuous sheet of flexible polyurethane foam with a density of 30 kg/m3 in the front and 20 kg/m3 in the back.
All this upholstered by means of a sheathed cover with careful with neat perimeter seams showing a fully upholstered image of the entire casing in its front, back, top and bottom view.
The curvatures of the casing, including the front curvature of the seat, are curvature of the front of the seat to provide a correct leg position to avoid of the legs avoiding pressure. Glue-free upholstery.
A single backrest height for the entire collection.

SEAT AND BACKREST LAMINATED WOOD (952)

Continuous shell (single-shell) laminated and ergonomically postformed plywood housing, 12 mm thick plywood, covered on its last external front and back layer with plastic laminate in wood design, in Oak or Dark Oak or White finish. Vertical grain. Laminated edge varnished in its silky touch colour, free of irregularities.
Scratch resistant and easy to clean, including the use of a damp cloth. damp cloth. Varnish-free except for the edges.
Option varnished natural beech veneer. Only one backrest height for the entire collection.

FINISHED WOODEN CASINGS (952)

Laminated Oak (RB) or Dark Oak (RBO) or White (B).
Optional, natural varnished beech veneer (HY).

FIXED STRUCTURES

Four Legs (F) Four-legged metal frame made of Ø16x2 mm steel tube. All welded together by electric continuous wire welding to form a single solid and stable structure, the surface is free of irregularities such as burrs and cracks. Metal arms included in the structure. This structure is easily stackable. Epoxy painted.

Armrest Four Legs (FB) Metal four legs structure and continuous structural arms made of Ø16x2 mm steel tube. All welded together by electric welding by continuous wire forming a single solid and stable structure, the surface is free of irregularities such as burrs and cracks. Easily STACKABLE.

Fixed sled structure (FP) Closed skate frame without arms, constructed by two solid Ø12 mm rod frames, which are joined together under the seat by two horizontal beams made of Ø14x2 mm round steel tube. All welded together by continuous wire welding to form a single solid and stable structure, the surface is free of irregularities such as burrs and cracks. Transparent or black polypropylene end caps in contact with the floor to avoid friction and noise and at the same time provide support stability. Structure easily stackable. Painted in epoxy or chrome finish. It can be preset for left or right hand writing shovel arm anchorage.

Four-legged medium or high stool (TA) (TM)
Four-legged metal frame made of Ø16x2 mm steel tube in two heights: for high stool 750 mm and for medium stool 650 mm. All welded together by continuous wire welding to form a single solid and stable structure, the surface is free of irregularities such as burrs and cracks. Curved U-shaped footrest made of Ø12mm rod welded to the structure. Structure easily stackable. Epoxy painted.

SHOVEL ARMREST

It is incorporated into the FP skid structure attached to it at the bottom by means of connecting fittings in models 950 and 952 -FP BPA. It cannot be incorporated into the FP model if it is not previously determined for this purpose. Metal arm made of solid chrome-plated rod with black PP armrests and black polyamide folding and anti-panic writing paddle, with metal knot and black polyamide. Writing tablet and nest in black polyamide. Allows pad chairs stacking (3 units).

SWIVELING STRUCTURES

Four legs with stops (4GT). Swivel structure with four-legged base in Black (N) or White (B) polypropylene, with sliding stops on the floor. Optional metal arm attached to the seat shell (model 4GT C/B). Nylon sliding stops in contact with the floor. Felts option.

Four legs with casters (4GR). Swivel frame with four-leg base in black polypropylene (N) with basic casters Ø50 mm. Optional metal arm attached to the seat shell (model 4GR C/B).

METAL ARMRESTS

To be fitted to swivel chairs (C/B models). Anchored to the seat at the bottom. Made of Ø16x2 mm steel tube and painted white (B) or black (N). Or included in the FB fixed chair structure.

BENCH SEATS

FLY upholstered seats 950 and wooden seats 952 can be anchored to the CONVEX or UVE metal frame structures. With two side legs and a 2 to 5-seater metal horizontal beam, each shell is anchored to the horizontal beam of the metal frame by means of inverted U-shaped sheet metal fittings located under the seat with 6x100mm Allen screws.

METAL COATINGS AND FINISHES

The painted metal parts are finished with a thermosetting powder coating based on epoxy resins, with phases of degreasing, rinsing and polymerisation by stoving at a minimum temperature of 200 degrees Celsius, achieving thicknesses between 30 and 50 microns. Standard colours of the collection: White RAL 9016 (B) and Black RAL 9005 (N) textured. Optional colours: Mink RAL 1019 (VI), Anthracite RAL 7016 (AN) and Light Grey NCS 3502-R (LG) The FP sled models are also available in chrome finish.

UPHOLSTERY

The chairs model 950 of the FLY collection can be upholstered in any of the fabrics included in the **delaoliva** sample collection, including suitable upholstery provided by the customer.

METAL STRUCTURE FINISHES

STANDARD

RAL 9005 | RAL 9016 | Chrome (CR)

FLY - WOOD COLORS

Mink (VI) RAL 1019 | Anthracite (AN) RAL 7016 | Light Grey (LG) NCS 3502-R

ACABADOS BASES POLIPROPILENO

Black (N) RAL 9005 | White (B) RAL 9016

ACABADOS CARCASAS ESTRATIFICADO

Light Oak (RB) | Dark Oak (RO)

CHAPA NATURAL BARNIZADA

Beech (HY)

■ REGULATIONS AND CERTIFICATES

· Manufacturing process under quality management certificate UNE-EN ISO 9001:2015, environment UNE-EN ISO 14001:2015 and Ecodesign UNE-EN ISO 14006:2011.
· Chair included in agreed product quality with AIDIMME: product certificate. *
· Recyclability sheet that includes a study of the lowest environmental impact of the product throughout its life cycle.
· Ecodesigned chair.
· Certified under the UNE-EN 16139 standard.
· Plywood from sustainable forests, FSC® certified.

ECODESIGN ISO 14006

* CONTROLLEDQUALITY BY AIDIMME

CERTIFICADO DE PRODUCTO

FSC www.fsc.org — The mark of responsible forestry FSC® C163226

ISO 9001 - ISO 14001 ISO 14006 BUREAU VERITAS Certification

■ SUSTAINABILITY

RAW MATERIALS

· Use of recycled and recyclable materials.
· Limitation in the use of hazardous substances.
· Packaging made of bags and/or recycled cardboard.

MANUFACTURING

· Energy optimization throughout the production process.
· Minimal environmental impact.
· Controlled waste management.
· Compliance with environmental regulations.
· Painting process with powder paint, free of VOCs.
· UNE-EN ISO 14001:2015 Environmental Management Certification.
· UNE-EN ISO 14006:2011 Ecodesign Certification.

TRANSPORT

· Scheduled routes, optimizing fuel expenses.
· Own trucks with maximum use of volume.
· Minimisation of packaging volume.

USE

· Optimization of the useful life.
· Easy cleaning and maintenance.
· After-sales service: repairs, upholsteries and spare parts.
· Guarantee against any manufacturing defect.
· Spare parts available for a minimum period of 10 years.

ELIMINATION

· Recyclable, once its useful life is over and after separation of components.
· It is recommended that they be delivered to a Clean Point for their correct separation and treatment, thus contributing to the environment.
· High degree of recyclability: over 98% recyclable.